VEGAMATIC **PUSHER**

THROUGH FEED SAWING CENTERS



A semiautomatic version cutting centre with 2 controlled axes, manual loading/unloading on opposite sides of the machine, with front CNC blade, dedicated to cutting Aluminium and PVC profiles and light alloys in general. It performs predefined and optimised cutting lists in automatic. Designed to execute cutting at angles ranging from 45° to 135° or from 22°30’ to 157°30’. Configurable with horizontal or vertical drilling units that can be personalised for specific automatic machining.

Emmegi S.p.A.
Via Archimede, 10
41019 - Limidi di Soliera (MO)
ITALY

Tel +39 059 895411
Fax +39 059 566286
P.Iva/C.Fisc 01978870366
info@emmegi.com
www.emmegi.com

The right to make technical alterations is reserved.

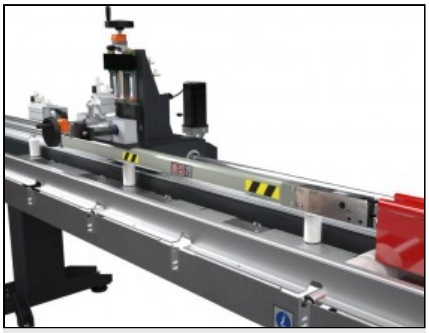

Bar feeder

The extremely fast and precise CNC numerical control system for bar positioning includes a gripper for clamping the profile and the possibility to manually adjust the position. The movement is transmitted on a rack through a low backlash gearbox to maintain the high standards of precision guaranteed by the CNC. The feeder slides on case-hardened and tempered bars through linear bushings.



Unloading roller conveyor

Vegamatic Pusher loads profiles on the left roller conveyor and unloads them from the right roller conveyor. The in-line machining makes it possible to limit the transfer of the profile on the working bench and to reduce cycle times.

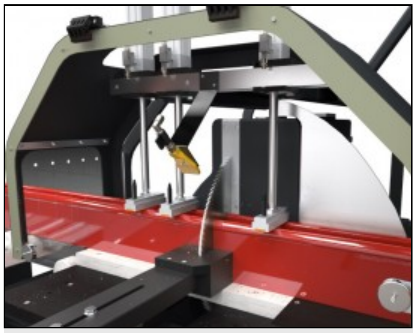

Cutting module

The cutting module consists of a single-head cutting off machine with hydro-pneumatic blade feed. It is provided with a 550 mm blade featuring wide cutting range: ffrom 45° to 135° or from 22°30’ to 157°30’ (based on model). Setting of the cutting angles is fully automatic and is handled by the CNC.



Control

The operator interface with colour LCD screen is equipped with network connection and USB ports. It also features a built-in control panel, keyboard and mouse. Possibility to install the label printer. The control is managed by the Windows operating system under which the Job and Blade software packages are installed: Job is designed for the job editor and optimizing cutting lists; Blade, installed alongside Job, controls the machine’s operations and manages the machining processes.

Emmegi S.p.A.
Via Archimede, 10
41019 - Limidi di Soliera (MO)
ITALY

Tel +39 059 895411
Fax +39 059 566286
P.Iva/C.Fisc 01978870366
info@emmegi.com
www.emmegi.com

The right to make technical alterations is reserved.

VEGAMATIC PUSHER / THROUGH FEED SAWING CENTERS

LAYOUT

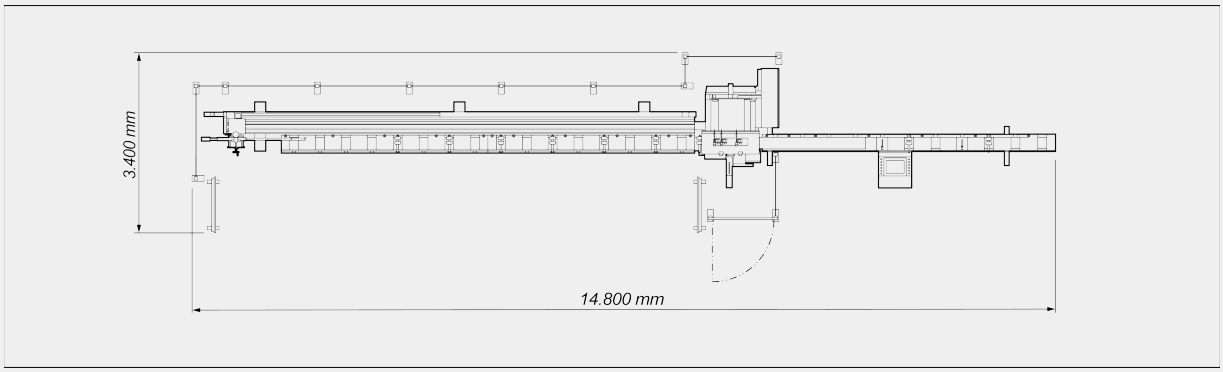

The overall dimensions may vary depending on the product configuration.

AXIS STROKES

U AXIS (feeder) (mm)	7.500
B AXIS (angle of blade) (according to version)	45° ÷ 135° ; 22°30’ ÷ 157°30’

LOADING UNIT: PROFILE POSITIONING

Infeed roller conveyor	●
Max. loadable profile length (mm)	6.850
Max. loadable profile width (mm)	190
Theoretical minimum cutting length (mm)	0
Minimum machinable profile section (mm)	30 x 30

CUTTING UNIT

Blade diameter at carbide-tipped (mm)	Ø = 550
Hydro-pneumatic blade feed	●
Minimal oil diffusion lubrication system	●
Power rating (kW), “three-phase” blade drive motor	3
Pre-set for swarf exhauster	●

Included ● Available ○

Emmegi S.p.A.
Via Archimede, 10
41019 - Limidi di Soliera (MO)
ITALY

Tel +39 059 895411
Fax +39 059 566286
P.Iva/C.Fisc 01978870366
info@emmegi.com
www.emmegi.com

The right to make technical alterations is reserved.

CUTTING DIAGRAM

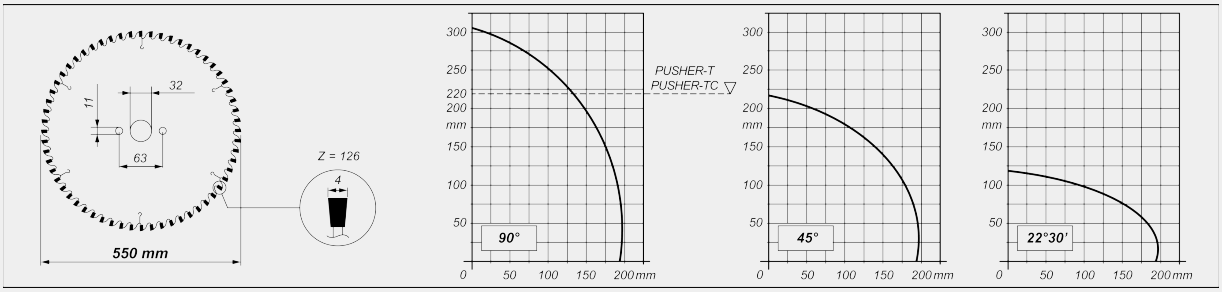

CUTTING UNIT TILTING

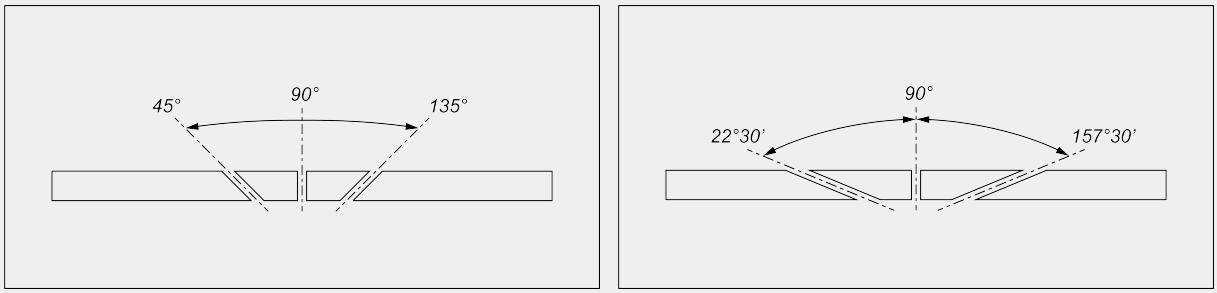

Electronic adjustment of intermediate angles

UNLOADING UNIT

Unloading on roller conveyor on opposite side of loading side	●

SAFETY DEVICES AND PROTECTIONS

Cutting area pneumatically-controlled integral protection	●

WORKPIECE LOCKING

Vertical pneumatic vices	3
Pair of horizontal pneumatic vices with pressure reducer plus pressure gauge	●
Vice pressure reduction with pressure gauge	●

Included ● Available ○

Emmegi S.p.A.
Via Archimede, 10
41019 - Limidi di Soliera (MO)
ITALY

Tel +39 059 895411
Fax +39 059 566286
P.Iva/C.Fisc 01978870366
info@emmegi.com
www.emmegi.com

The right to make technical alterations is reserved.

SWARF EVACUATION

Provision for swarf exhauster system	●
Required negative pressure (mbar)	30
Required capacity (m³/h)	1.400
Suction inlet diameter (mm)	70
Recommended swarf exhauster model	MG4-VP
Extraction kit	Ø 70

Included ● Available ○

Emmegi S.p.A.
Via Archimede, 10
41019 - Limidi di Soliera (MO)
ITALY

Tel +39 059 895411
Fax +39 059 566286
P.Iva/C.Fisc 01978870366
info@emmegi.com
www.emmegi.com

The right to make technical alterations is reserved.